Advme7004

SH-4 CPU Board

Equipped with RENESAS SH7750（SH-4）
On-board SDRAM（128MB）
Equipped with 100/10 Base-TX Ethernet（1 port）
Equipped with Motionnet（1 port）
Equipped with Serial port（4 ports）
On-board CompactFlash available

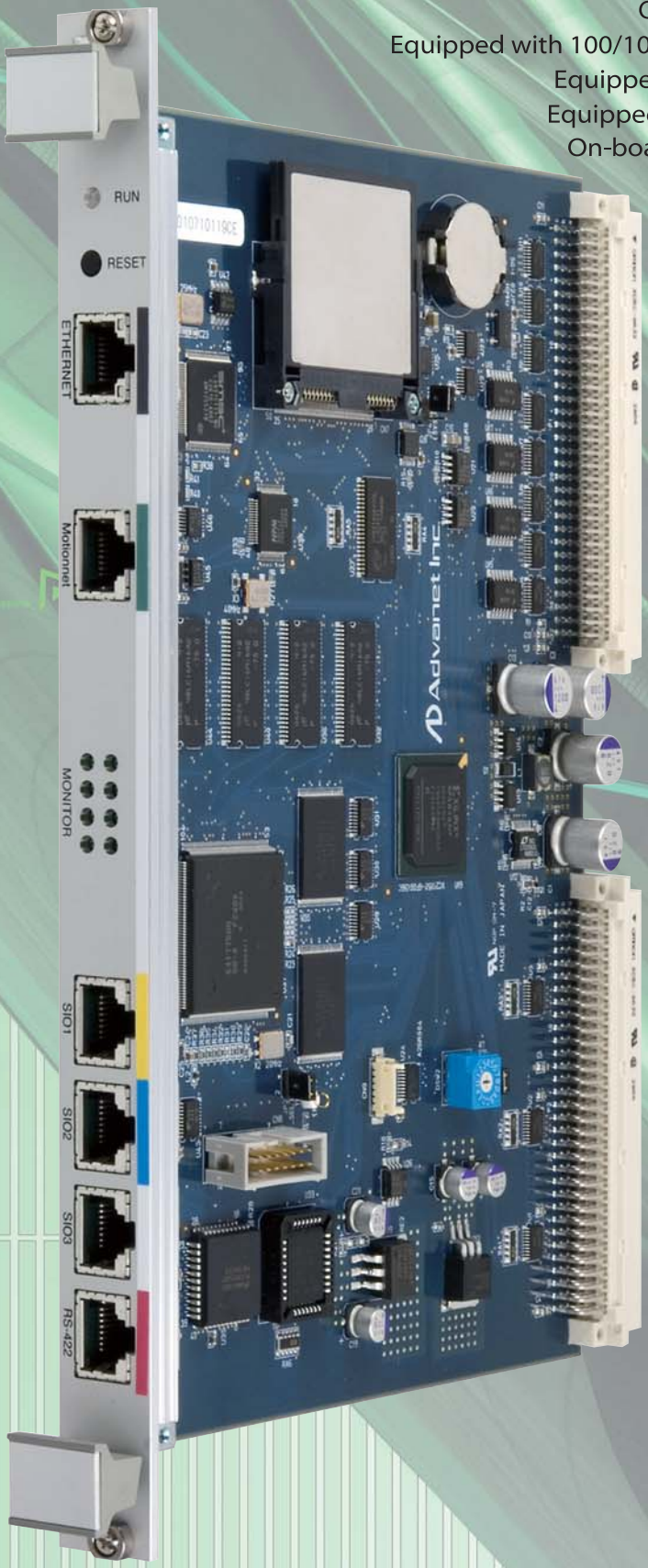

Advme7004

RoHS

SH-4 CPU Board

Overview

This board is a VME bus CPU board equipped with RENESAS 32-bit RISC-CPU SH7750 (SH-4) core. The VME bus interface is realized by dedicated FPGA, which enables direct access without going through another bus. I/O interfaces include one 100/10 Base-TX Ethernet port, one Motionnet port and four serial ports, which have the fanction of three RS-232C ports and one RS-422 port.
Main memory includes 128MB of onboard SDRAM, and 512KB SRAM with battery backup. Non-volatile memory includes a socket-mounted 512KB boot Flash memory, and a 16MB onboard application Flash memory.
In addition, this board has a 14 pin connector to connect the ICE.

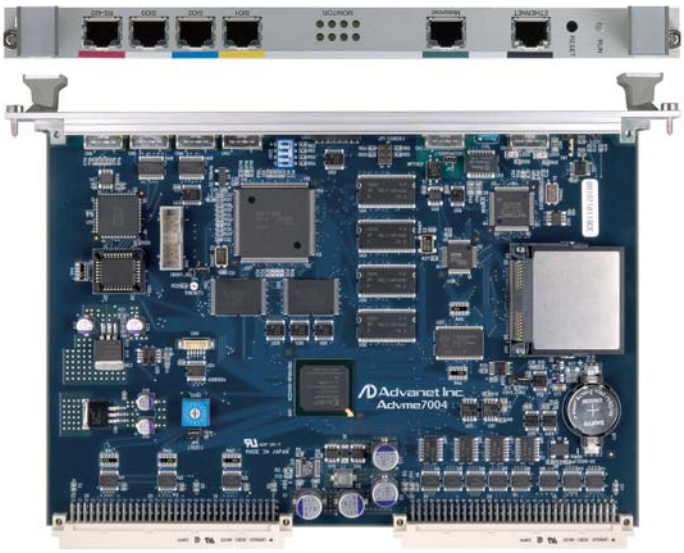

*The CompactFlash and memory module in the above photo are optional

Block diagram

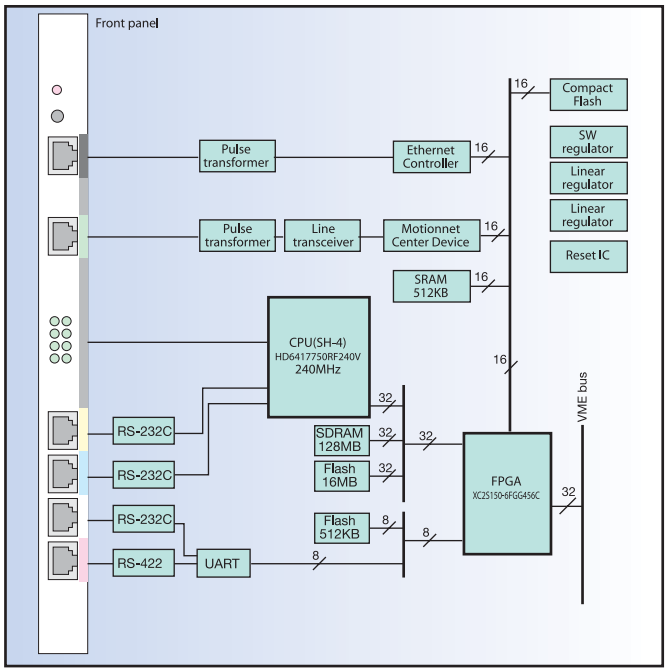

Specifications

CPU	RENESAS HD6417750RF240V（QFP256）SH-4 Internal operating frequency：240MHz
Memory	Main memory：Maximum 128MB SDRAM（onboard） Boot ROM：512KB Flash memory Application ROM：16MB Backup SRAM：512KB
Peripheral	RS-232C x 3ch、RS-422 x 1ch（RJ-45） Motionnet x 1ch（RJ-45） 10/100BASE-T Ethernet x 1ch（RJ-45）
CompactFlash	Supports 3.3V module（module is optional）
VME bus	VMEbus Specification Rev.3 compliant Bus width：A32/A24/A16、D32/D16/D08（EO）
Features	Bus master, Arbiter, Interrupt handler, Bus monitor
Controller	Dedicated FPGA
Power Supply	DC5.0V±5%（supplied by VME rack）
Power consumption	DC5.0V：1.2A typ.
Board size	6U, single slot width

Please consult us regarding your specific custom requirements

Note: The following specifications and product appearance are subject to change for enhancement without notice.

ISO9001 Certification 4016-1995-AQ-KOB-RvA Rev.1
ISO14001 Certification 1426-1999-AE-KOB-RvA
ISO27001 Certification 01681-2006-AIS-KOB-JIPDEC

HUMAN ELECTRONICS
Advanet Inc.
www.advanet.co.jp

Headquarters 616-4, Tanaka, Okayama 700-0951 JAPAN TEL +81-86-245-2861 FAX +81-86-245-2860
Tokyo Branch 3F, Hayakawa No.3 Building, 2-2Kanda-Tacho, Chiyoda-ku, Tokyo 101-0046 JAPAN TEL +81-3-5294-1731 FAX +81-3-5294-1734
Development Center in Kobe Misaki U-Building 2nd Floor,1-2-1, Misaki-cho,Hyogo-ku, Kobe City Hyogo Pref. 652-0855 Japan TEL +81-78-652-8100 FAX +81-78-652-8177